TECHNICAL SPECS:
Current Rating:3.0AMP
Contact Resistance:10mΩ Max
Dielectric Strength: Min 1000VRMS
Mechanical Life: Min 500 cycles
Operation Temperature:-40°C to +105°C

Sleeve:Brass CuZn36Pb3(C36000)
Connecting Pin:ø0.47mm
Contact plating:Au or Sn over Ni
Insulator Material:PPS+30%G.F(UL94V-0)
Coplanariny SMD terminations:max 0.1mm
(measured on 25mm long connectors)

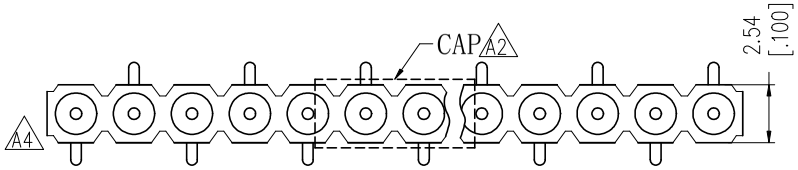

TYPE 1

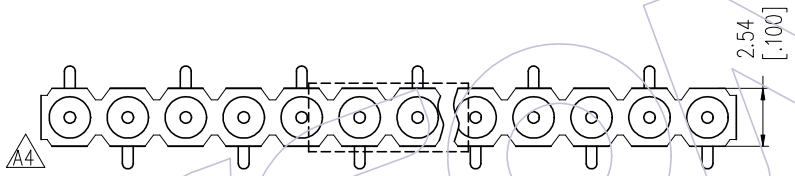

TYPE 2

Recommended P.C.B Layout(Top Side)
(PCB BOARD TOLERANCE±0.05)

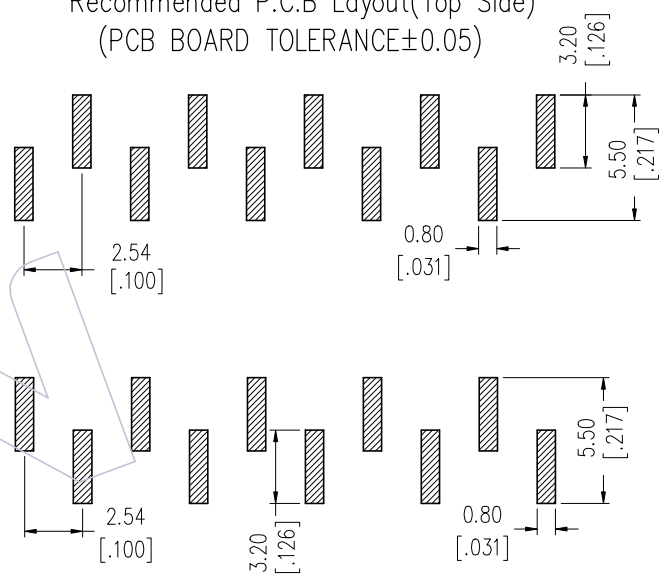

Ordering Information

3510-301 XX M XX 100 T X

- No. of Pin: 2~40PIN
- Contact Plating: G0=Gold Flash; G1=3u"Gold; G2=5u"Gold; G3=10u"Gold; G4=15u"Gold; G5=30u"Gold; S0=Sel.Gold Flash/Tin; SN=Tin
- Packing: T=Tube; R=Reel+CAP
- Series No.: 1=Type 1; 2=Type 2

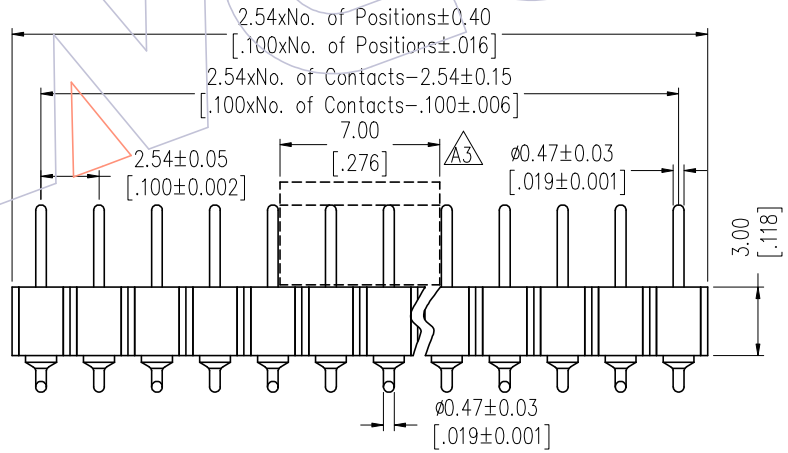

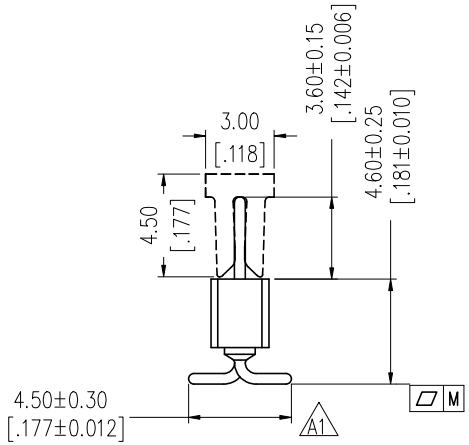

A3

PIN	2-10P	11-30P	31-40P
M	0.10	0.15	0.25

REV	DATE	MODIFICATION DESCRIPTION	CHANGE
A4	2024/03/19	Modify Drawing	——
A3	2019/07/20	Modify the CAP	——
A2	2019/04/11	Add the CAP	——
A0	2009/02/28	NEW	——

OPERATION	
X.X	±0.40
X.XX	±0.25
X.XXX	±0.15
Angle	± 3°
DIM	TOL

DRAW	CP	DATE	2024/03/19
CHECK		DATE	
APPROVE		DATE	

SCALE	FIT
UNIT	mm / inch
SIZE	A4
SHEET	1/1
PROJ.	

PART NO. 3510-301XXMXX100XX

TITLE: 2.54mm MACHINED PIN HEADER SINGLE ROW 180° SMT H=3.00 L=10.0

Customer NO.

WCON
Http: www.wcon.com

WCON-Dongguan
Tel: +86 769 85358920
Fax: +86 769 85358915
E-mail: sales@wcon.com

WCON-Kunshan
Tel: +86 512 57468408
Fax: +86 512 57468468
E-mail: salesks@wcon.com