HSF

NOTES:
1.Current Rating:15A (16AWG),12A (18AWG),10A (20AWG); A2
2.Contact Resistance: 10mΩ Max;
3.Operating Temperature: −55℃ to +105℃;
4.Contact Material:Copper Alloy;
5.Contact plating:
SN:100μ" Tin over 50μ"Nickel.
SX:xxμ" Gold on contact area (See ordering information),
50μ" Nickel underplating overall;
6.Wire Range:20−16AWG;
7.Insulation OD range:ø1.8−2.8mm;

Ordering Information

WD3810-MT D4 16 XX 01

- MT=Tab Contact
- Material
- Wire Range: 16=20~16AWG
- Contact Plated: A1
  - SN=TIN
  - S1=3u" Au/Ni
  - S4=15u" Au/Ni
  - S5=30u" Au/Ni
- wcon Internal Code

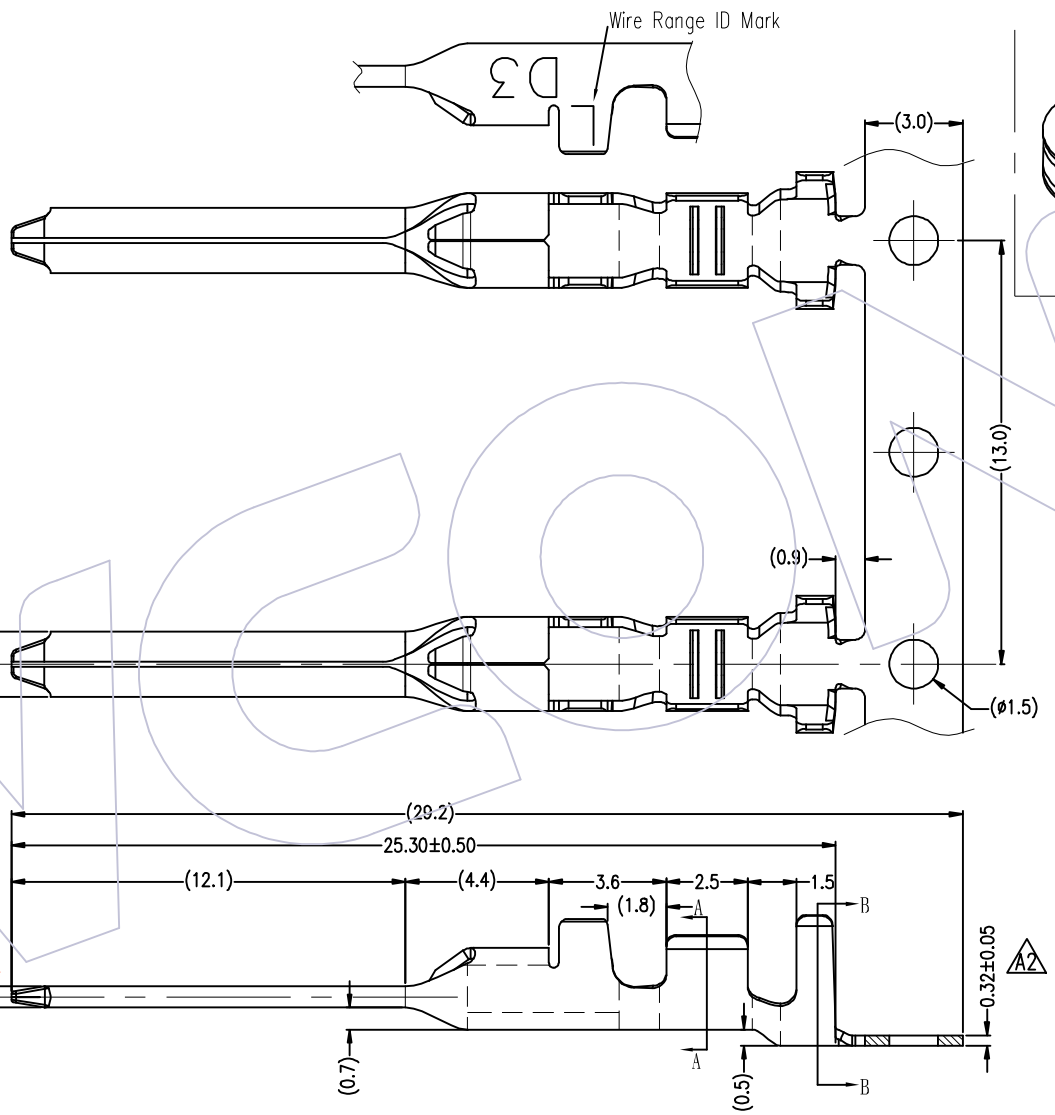

SCHEMATIC DIAGRAM OF TERMINAL DISCHARGE

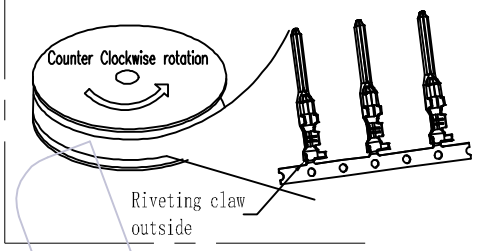

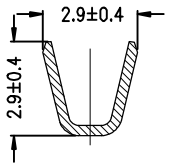

A−A

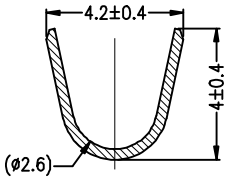

B−B

				OPERATION		DRAW	DATE	SCALE	FIT	PART NO.	
						OHJ	2024.03.07			WD3810−MTD416XX01	
A2	2024.03.07	Add wire current rating,Add dimensions	OHJ	X.X	±0.30			UNIT	mm		
A1	2021.12.23	Adding plating specification	Houfu Peng	X.XX	±0.25	CHECK	DATE	SIZE	A4	TITLE: 3.81mm Tab Contact (Wire Range ID Mark:L)	
A0	2021.08.18	NEW	Houfu Peng	X.XXX	±0.2			SHEET	1/1		
REV	DATE	MODIFICATION DESCRIPTION	CHANGE	Angle	± 3°	APPROVE	DATE	PROJ.		Customer NO.	
				DIM	TOL						

WCON
Http: www.wcon.com
WCON−Dongguan
Tel: +86 769 85358920
Fax: +86 769 85358915
E-mail: sales@wcon.com
WCON−Kunshan
Tel: +86 512 57468408
Fax: +86 512 57468468
E-mail: salesks@wcon.com